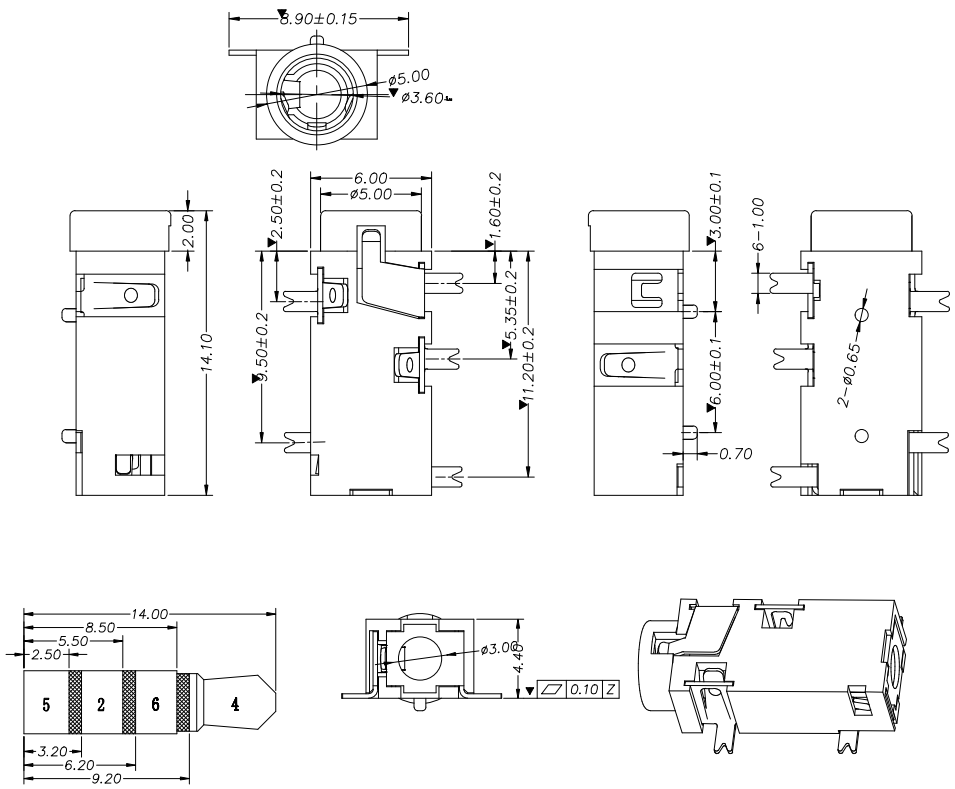

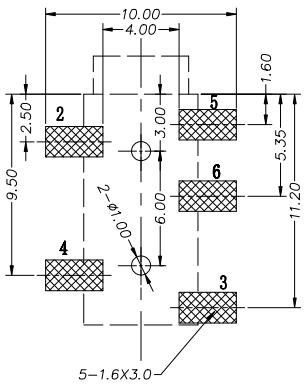

HOLE LAYOUT

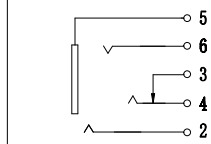

SCHEMATIC

DONGGUAN DISONG ELECTRONIC CO.,LTD.

TITLE : PHONE JACK					
MODEL : ST-327E					
UNIT : MM	DWN.		DATE		
SCALE : 4 : 1	CHK'D		DATE		
VERSION 01	APPD.		DATE		

TOLERANCE	ANGLE TOL
<=5mm ±0.1 > 5mm ±0.2	±2°

NO.	PART NAME	MATERIAL	QTY.	FINISHING
3	TERMINAL B\C	PBS STRIP t=0.2mm	2	Ag PLATED
2	TERMINAL D	BRASS STRIP t=0.4mm	1	Ag PLATED
1	HOUSING	PBT	1	BLACK/GREEN