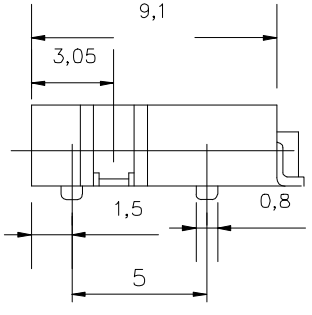

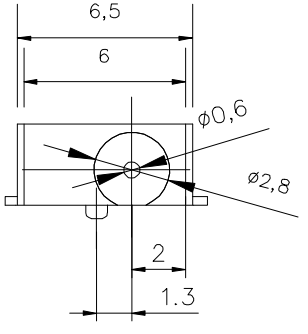

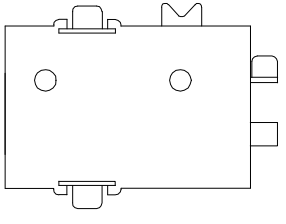

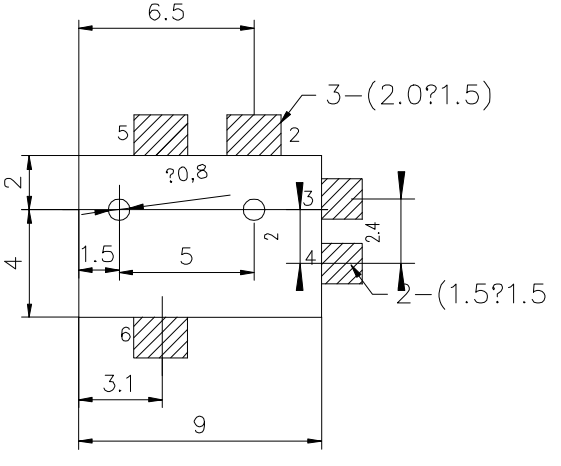

HOLE LAYOUT

SCHEMATIC

DONGGUAN DISONG ELECTRONIC CO., LTD.

TITLE :	DC POWER JACK
MODEL :	DC-056
UNIT :	MM
SCALE :	4 : 1
VERSION	01
DWN.	
CHK'D	
APPD.	
DATE	
DATE	
DATE	

TOLERANCE	ANGLE TOL
<=5mm ±0.1 > 5mm ±0.2	±2°

NO.	PART NAME	MATERIAL	QTY.	FINISHING
5	TERMINAL C	BRASS STRIP	2	Ag PLATED
4	TERMINAL B	PBS STRIP	1	Ag PLATED
3	TERMINAL A	BRASS STRIP	2	Ag PLATED
2	PIN	BRASS	1	Ag PLATED
1	CASE	NYLON	1	BLACK