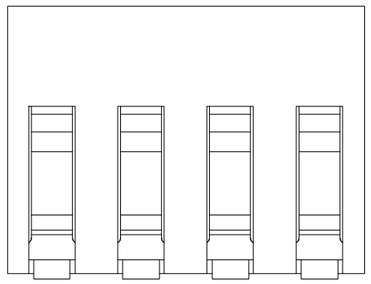

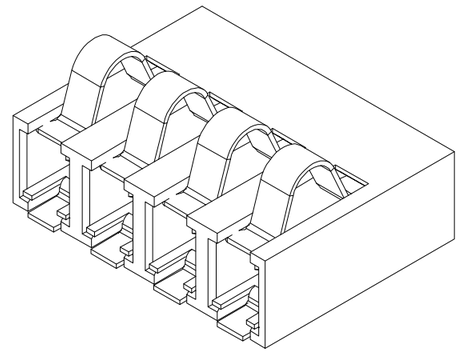

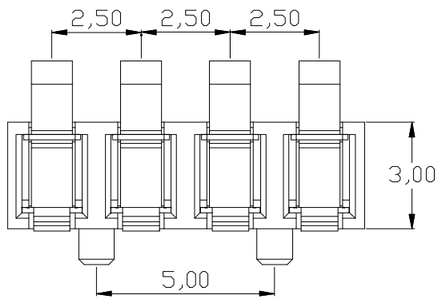

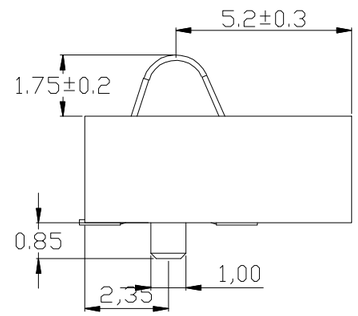

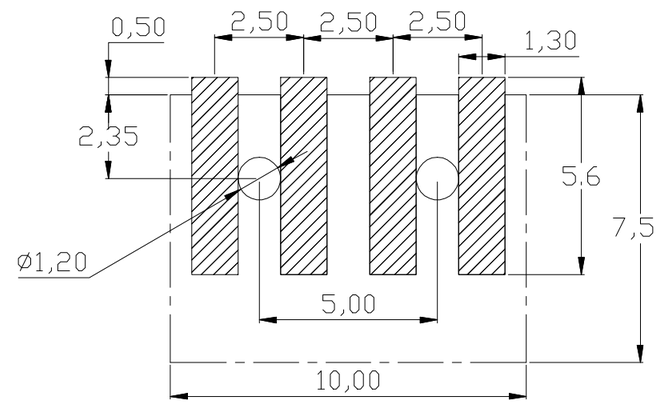

RECOMMENDED PCB LAYOUT

TOP VIEW(.XX±0.05)

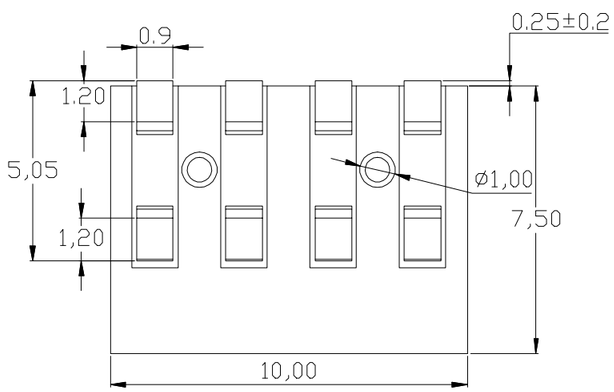

NO.	PARTS	MATERIAL	QTY.	FINISHING
2	HOUSING	LCP	1	BLACK
1	CONTACT TERMINAL	BeCu	3	Au PLATED

DISONG ELECTRONIC CO.,LTD.

COPYRIGHT RESERVED,PLEASE DO NOT COPY.

PART NAME	CONNECTOR	DRAWING	Y.C.Zhang	DWG.No.	DS-BC-007
PART NO.	BC-1-402	CHECK	G.C.Chen	REV.	A0
UNIT : mm	TOLERANCE OTHERWISE: UP TO 5 ±0.2; ABOVE 5 ~30 ±0.3; ABOVE 30 ±0.5; ANGLE ±3°	ANGLE 0°±3° / APPROVAL		DATE	05-11-2016
		SCALE	2:1	PAGE	1 OF 1