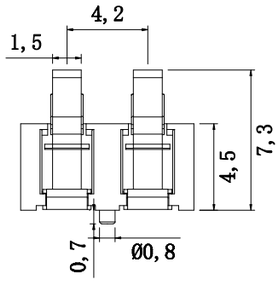

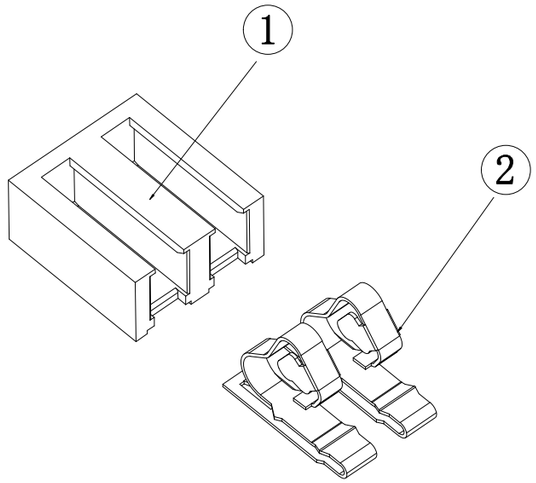

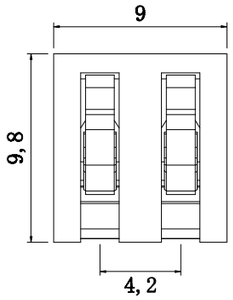

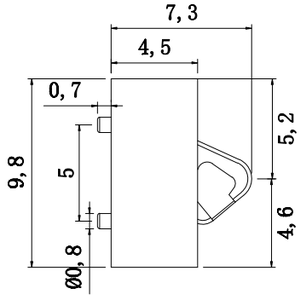

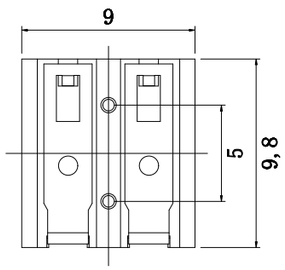

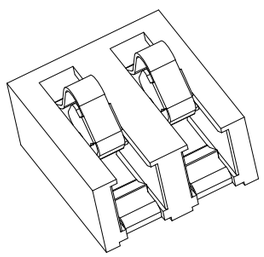

NO.	PARTS	MATERIAL	QTY.	FINISHING
2	HOUSING	LCP	1	BLACK
1	CONTACT TERMINAL	SUS	3	Au PLATED

DISONG ELECTRONIC CO., LTD.

COPYRIGHT RESERVED,PLEASE DO NOT COPY.

PART NAME	CONNECTOR	DRAWING	G.B.Wu	DWG.No.	DS-BC-171
PART NO.	BC-1-209	CHECK	Q.L..Dai	REV.	A0
UNIT : mm	TOLERANCE OTHERWISE: UP TO 5 ±0.2; ABOVE 5 30 ±0.3; ABOVE 30 ±0.5; ANGLE ±3°; ANGLE 0°±3°	APPROVAL		DATE	02-09-2017
		SCALE	2:1	PAGE	1 OF 1